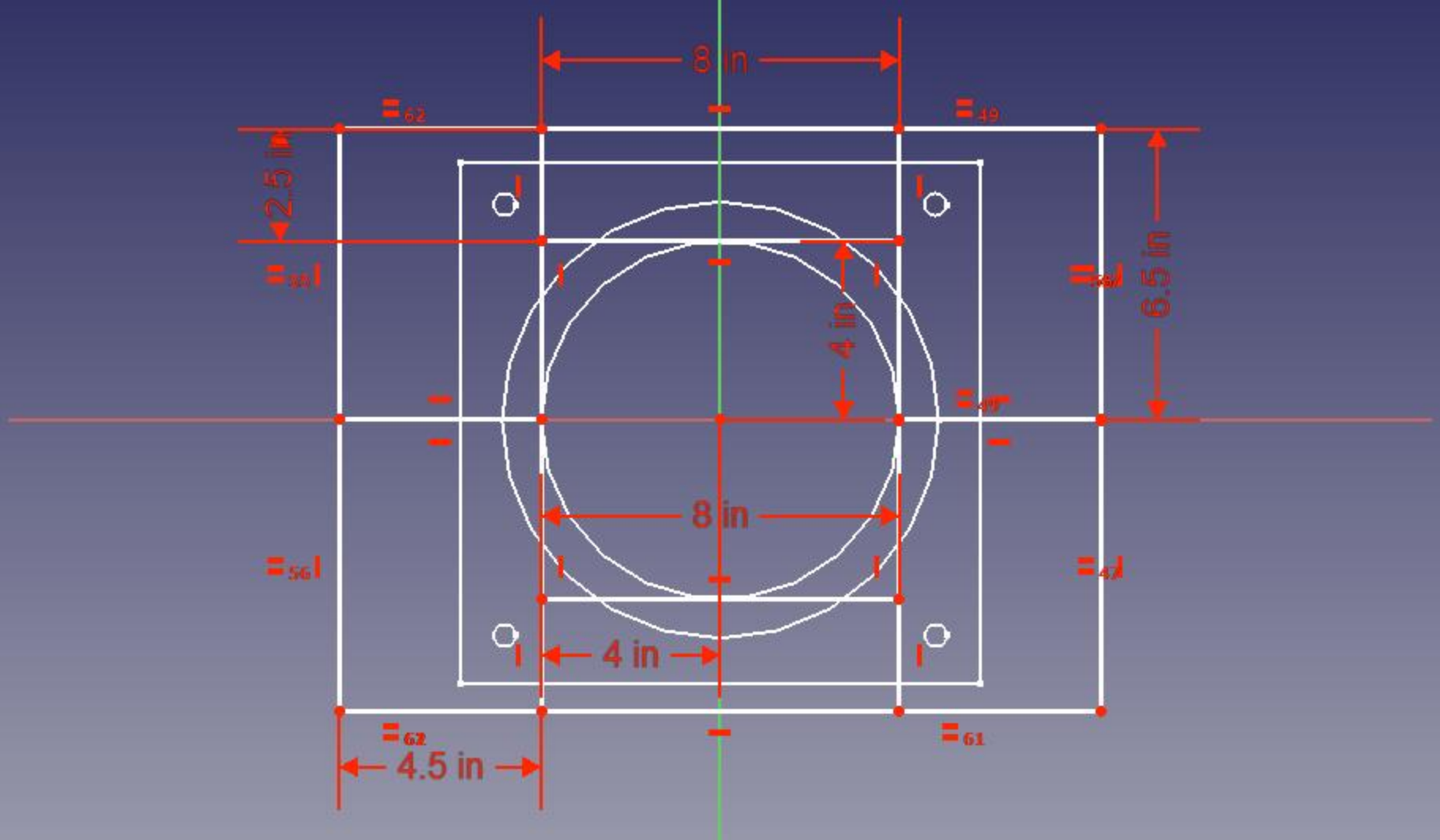
8 in
2.5 in
6.5 in
4 in
8 in
4 in
4.5 in